REV.	DESCRIPTION	APPORVED	DATE	ECN

NOTES: (UNLESS OTHERWISE SPECIFIED)

1. Part must be packaged to avoid any damaged during transportation.

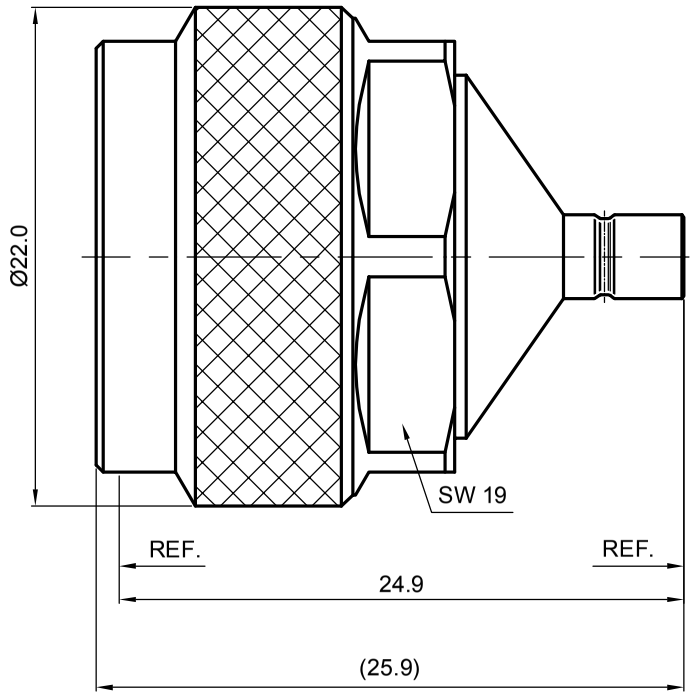

1.6

MATERIAL
SEE BOM OF DETAILS

FINISH
SEE BOM OF DETAILS

Plating part to be touched by gloves

Dimension apply before plating

XXX - measuring point for plating

SURFACE	VOLUME

TOLERANCES

0place	X	±1
1place	.X	±0.1
2place	.XX	±0.05
Angle		±5°

Remove burrs and sharp edges

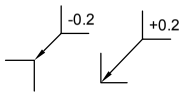

THIRD ANGLE PROJECTION

GENERAL ECCENTRICITY 0.06

	NAME	DATE
DRAWN BY	Billy.Lei	12 Dec 07
CHECKED BY		
APPROVED BY		

NOTICE: Those drawings and specifications are the property of ZEETEQ CORPORATION and used only for the specify purpose authorised by ZEETEQ

Zeeteq

TITLE
N PLUG - SMB PLUG ADAPTOR

DWG NO.
A5018.NPSMBP

REV.
S1

SCALE 2:1 | DO NOT SCALE DRAWING | SIZE A4 | SHEET 1 of 1